2. Front Brake Pad

A: REMOVAL

1. 15-INCH TYPE

1) Set the vehicle on a lift.
2) Loosen the wheel nuts.
3) Lift up the vehicle, and remove the front wheels.
4) Remove the lower caliper bolts.
5) Raise the caliper body and support it.

NOTE:
Do not disconnect the brake hose from the caliper body.

6) Remove the pad.

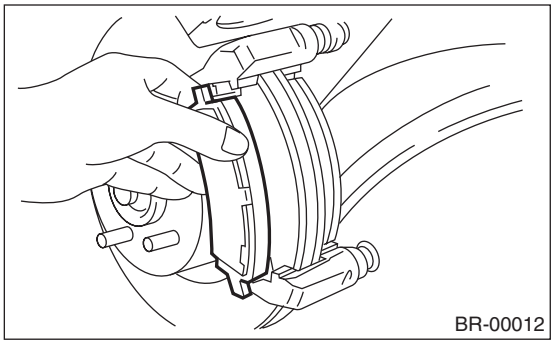

NOTE:
If the brake pad is difficult to remove, proceed as follows:

(1) Remove the caliper body from support.
(2) Remove the support.
(3) Place the support between wooden blocks in the vise.

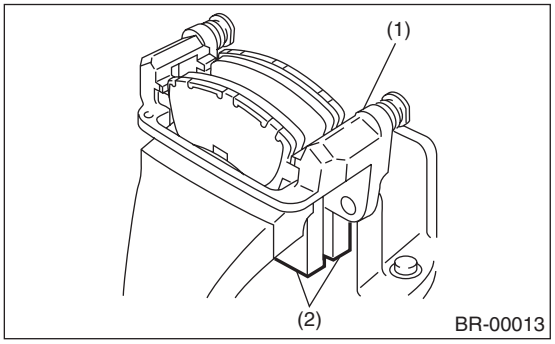

(1) Support
(2) Wooden block

(4) Attach a rod of 12 mm (0.47 in) diameter or less to the shaded area of the brake pad, and strike the rod with a hammer to drive brake pad out.

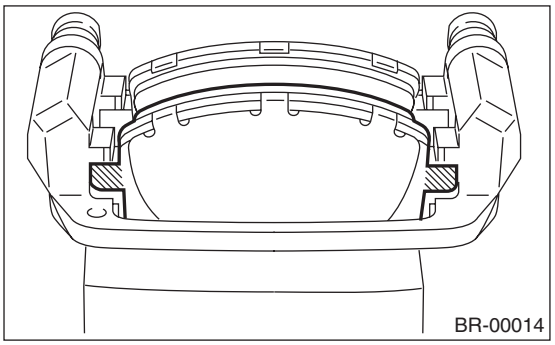

2. 16-INCH TYPE

1) Set the vehicle on a lift.
2) Loosen the wheel nuts.
3) Lift up the vehicle, and remove the front wheels.
4) Remove the M clip.

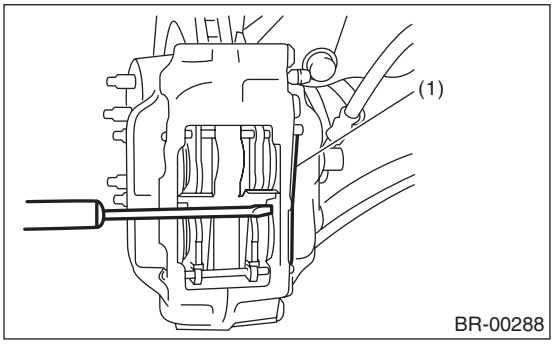

(1) M clip

5) Remove the pad pin, then remove the cross spring.

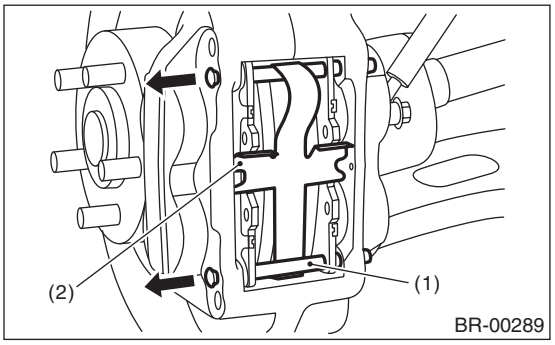

(1) Pad pin
(2) Cross spring

6) Use a wrench to spread the pad, and push back the piston.

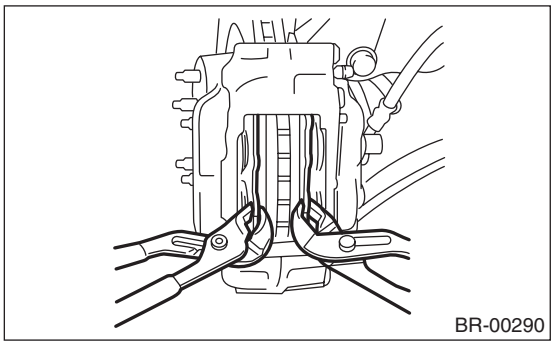

7) Remove the pad.

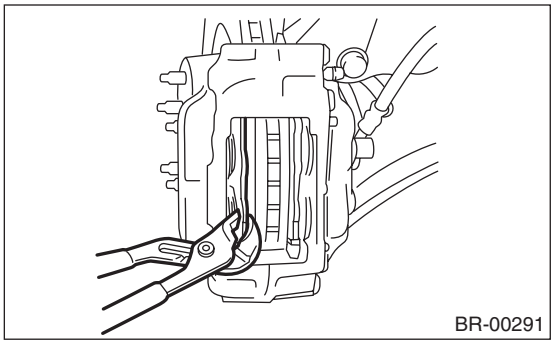

3. 17-INCH TYPE

1) Set the vehicle on a lift.
2) Loosen the wheel nuts.
3) Lift up the vehicle, and remove the front wheels.
4) Remove the clip.

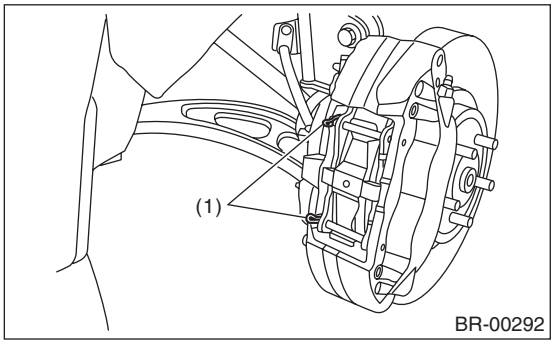

(1) Clip

5) Remove the pad pin and cross spring.

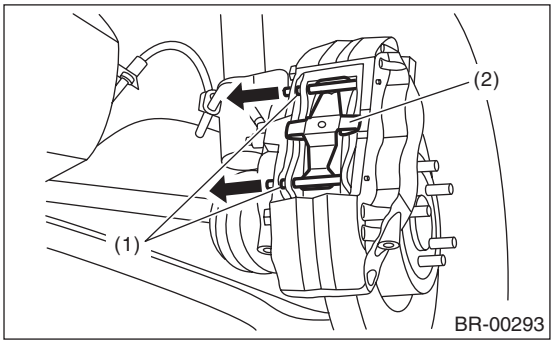

(1) Pad pin
(2) Cross spring

6) Use a wrench to spread the pad, and push back the piston.

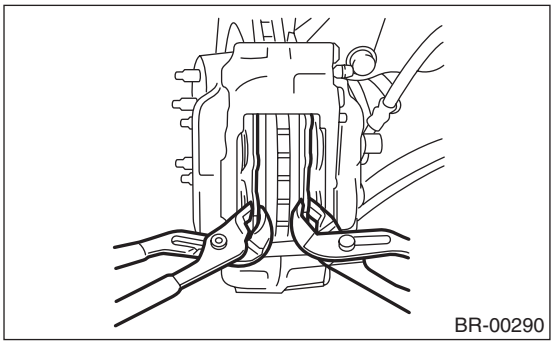

7) Remove the pad.

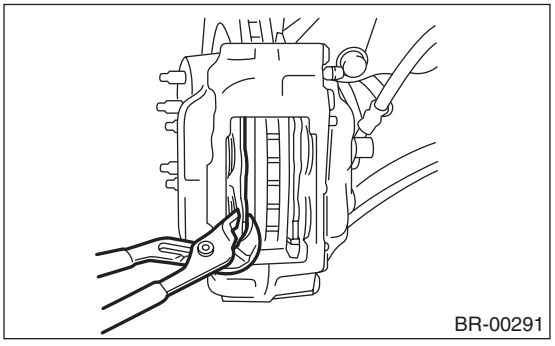

B: INSTALLATION

1. 15-INCH TYPE

1) Apply a thin coat of Molykote M7439 (Part No. 003602001) to the support.

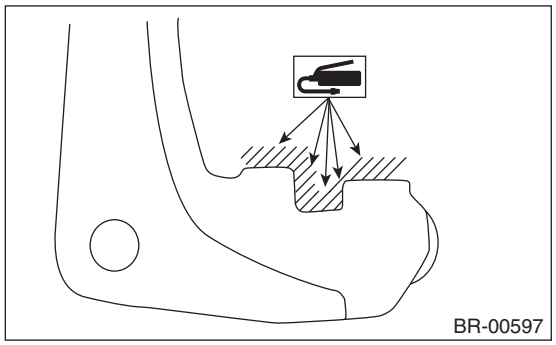

2) Apply a thin coat of Molykote M7439 (Part No. 003602001) to the contact surface between the pad and pad clip.

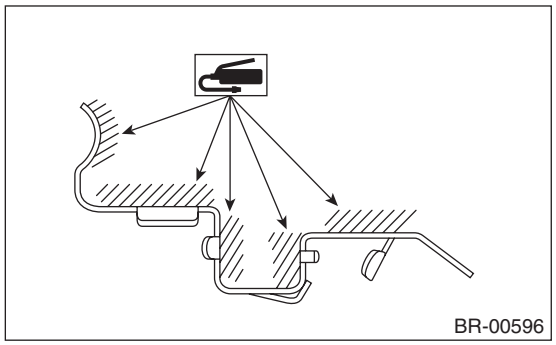

3) Apply a thin coat of Molykote AS-880N (Part No. K0777YA010) to both surfaces of the pad inner shim.

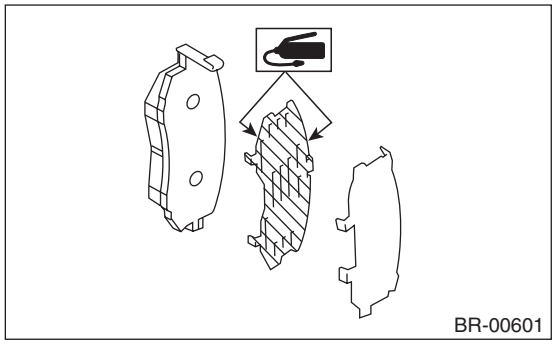

4) Install the pad to support.
5) Install the caliper body to the support.

Tightening torque:
26.5 N·m (2.7 kgf-m, 19.5 ft-lb)

NOTE:
If it is difficult to push the piston during pad replacement, loosen the air bleeder screws to facilitate work.

2. 16-INCH TYPE

1) Apply a thin coat of Molykote AS-880N (Part No. K0777YA010) to both surfaces of the pad inner shim, and Molykote M7439 (Part No. 003602001) to the sides of pad.

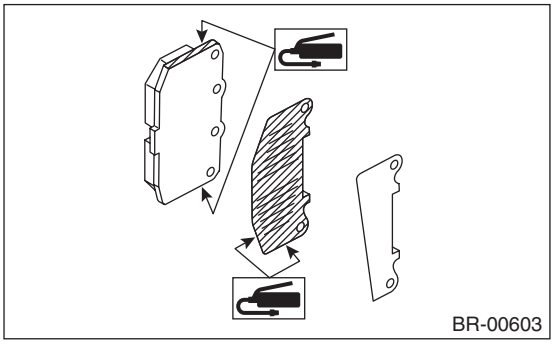

2) Install the pad to the caliper body.
3) Install the pad pin to the caliper body.
4) Attach the M clip.
5) Attach the cross spring.

3. 17-INCH TYPE

1) Apply a thin coat of Molykote AS-880N (Part No. K0777YA010) to both surfaces of the pad inner shim, and Molykote M7439 (Part No. 003602001) to the sides of pad.

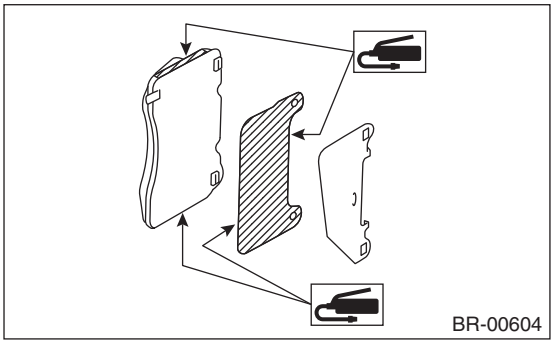

2) Install the pad to the caliper body.
3) Attach the cross spring.
4) Attach the pad pin.
5) Install the clip.

C: INSPECTION

1. 15-INCH TYPE

Check the pad thickness A.

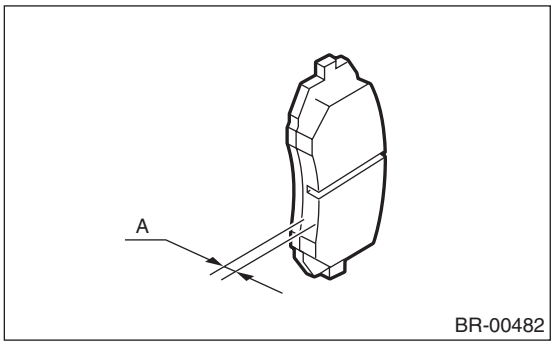

Pad thickness	Standard	11 mm (0.43 in)
	Wear limit	1.5 mm (0.059 in)

NOTE:
- Always replace the pads of both sides as a set.
- Replace pad clips if they are twisted or worn.
- A wear indicator is installed on the inner disc brake pad. If the pad is worn to the limit, the end of wear indicator contacts disc rotor, and a squeaking sound is heard as the wheel rotates. If the sound is heard, replace the pad.
- Replace the pad if there is oil or grease on it.

2. 16-INCH TYPE

Check the pad thickness A.

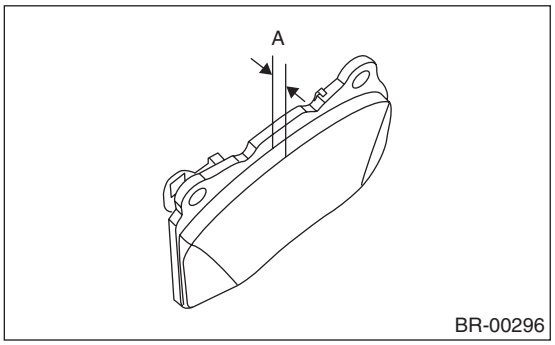

Pad thickness	Standard	10 mm (0.393 in)
	Wear limit	1.5 mm (0.059 in)

NOTE:
- Always replace the pads of both sides as a set.
- Replace pad clips if they are twisted or worn.
- A wear indicator is installed on the inner disc brake pad. If the pad is worn to the limit, the end of wear indicator contacts disc rotor, and a squeaking sound is heard as the wheel rotates. If the sound is heard, replace the pad.
- Replace the pad if there is oil or grease on it.

3. 17-INCH TYPE

Check the pad thickness A.

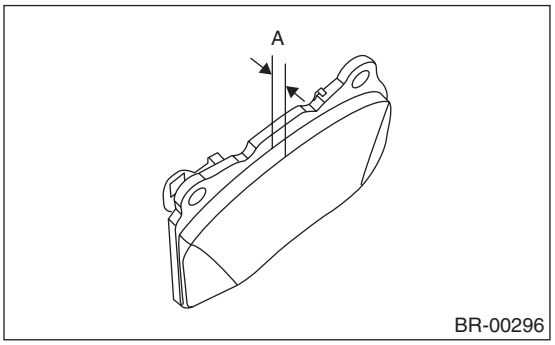

Pad thickness	Standard	9.2 mm (0.362 in)
	Wear limit	1.2 mm (0.047 in)

NOTE:
- Always replace the pads of both sides as a set.
- Replace pad clips if they are twisted or worn.
- A wear indicator is installed on the inner disc brake pad. If the pad is worn to the limit, the end of wear indicator contacts disc rotor, and a squeaking sound is heard as the wheel rotates. If the sound is heard, replace the pad.
- Replace the pad if there is oil or grease on it.